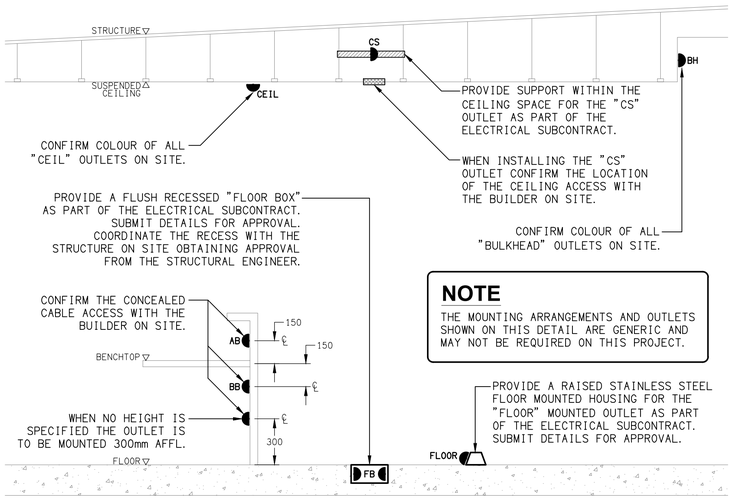

NOTE

THE MOUNTING ARRANGEMENTS AND OUTLETS SHOWN ON THIS DETAIL ARE GENERIC AND MAY NOT BE REQUIRED ON THIS PROJECT.

DETAIL
TYPICAL OUTLET MOUNTINGS
NOT TO SCALE

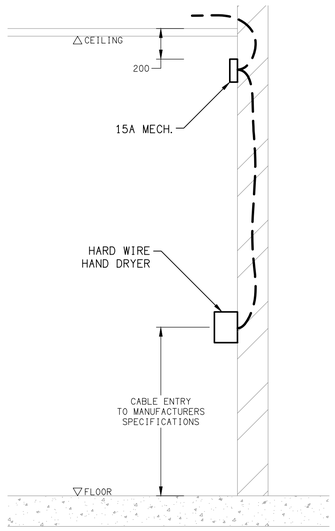

DETAIL
HAND DRYER CONNECTION
NOT TO SCALE

EQUIPMENT:

TEST – TEST PUSH BUTTON MOUNTED ON THE DISTRIBUTION BOARD ESCUTCHEON.

RESET – RESET PUSH BUTTON MOUNTED ON THE DISTRIBUTION BOARD ESCUTCHEON.

LAMP – AMBER TEST INDICATING LAMP MOUNTED ON THE DISTRIBUTION BOARD ESCUTCHEON.

Ta – ADJUSTABLE 0-3 HOUR TIMED RELAY.

Tb – 15 MINUTE RUN-ON TIMER TO OPERATE UPON THE RETURN OF MAINS POWER.

Cx – CONTACTOR x.

CRx – CONTROL RELAY x.

Rx – RELAY x.

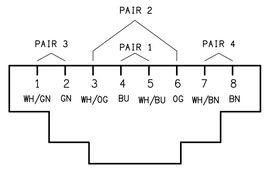

SCHEMATIC
RJ45 PINOUT CONFIGURATION
NOT TO SCALE

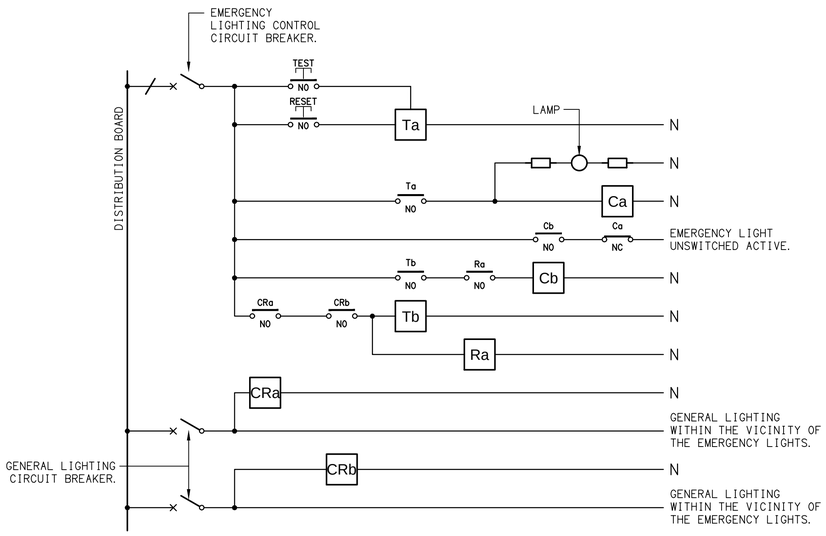

SCHEMATIC
EMERGENCY LIGHTING
NOT TO SCALE

NOTES

1. THE EMERGENCY LIGHT UNSWITCHED ACTIVE / GENERAL LIGHTING SWITCHED ACTIVE CIRCUIT ARRANGEMENT AND CONTROL IS TYPICAL FOR ALL CIRCUITS SUPPLYING EMERGENCY LIGHTS.

2. PROVIDE ADDITIONAL CONTROL RELAYS (CRx) CONFIGURED AS PER CRa AND CRb FOR ALL ADDITIONAL LIGHTING CIRCUITS THAT SUPPLY LIGHTS IN THE VICINITY OF THE EMERGENCY LIGHTS.

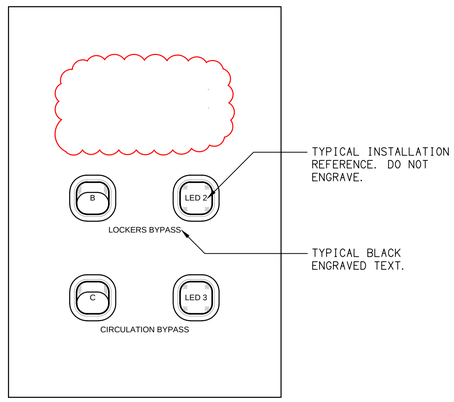

DETAIL
LIGHTING CONTROL PANEL (LCP) ELEVATION
NOT TO SCALE

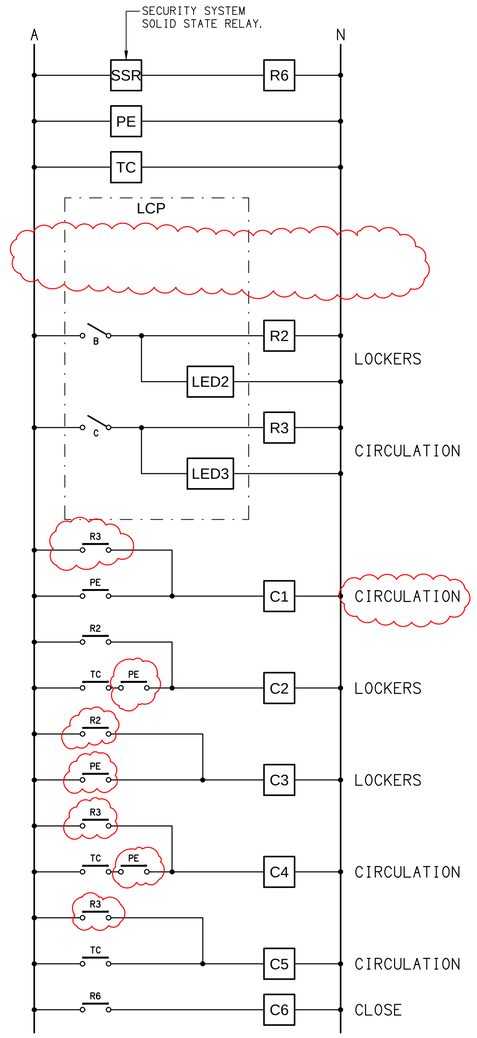

SCHEMATIC
LIGHTING CONTROL PANEL (LCP) CONTROL
NOT TO SCALE

REV:	DESCRIPTION:	DATE:
D	CONSTRUCTION	21/10/2026

ELECTRICAL DESIGN GROUP BRISBANE PTY LTD
ACN 092 710 793

TRADING AS:
ELECTRICAL DESIGN GROUP

THE COPYRIGHT OF THIS DRAWING REMAINS THE PROPERTY OF THE ELECTRICAL DESIGN GROUP.

USE FIGURED DIMENSIONS IN PREFERENCE TO SCALE.

ALL DIMENSIONS TO BE VERIFIED ONSITE.

ELECTRICAL DESIGN GROUP
ELECTRICAL BUILDING SERVICES CONSULTANTS
BRISBANE GOLD COAST
P.O.Box 15, Sherwood Q.4075
Phone: (07) 3278 4375
Email: brisbane@edg.net.au
Web: www.edg.net.au

PROJECT:
ORMISTON COLLEGE
BUSINESS & ARTS PRECINCT

97 DUNDAS STREET WEST, ORMISTON

DRAWING:
ELECTRICAL SERVICES
SCHEMATICS & DETAILS

SCALE: NOT TO SCALE AT A1

PROJECT NO:	DRAWING NO:	REVISION:
C3666a	E03	D